PUBLISHED: 26-OCT-2017
2022.0 DEFENDER (LE), 307-01

AUTOMATIC TRANSMISSION/TRANSAXLE - VEHICLES WITH: 8HP70 8-SPEED AUTOMATIC TRANSMISSION AWD

INPUT SHAFT SEAL (G1976217)

REMOVAL AND INSTALLATION

44.20.17	OIL SEAL - INPUT SHAFT - RENEW	3000 CC, TDV6, WITH PARTICULATE FILTER, WITH DIESEL EXHAUST FLUID	6.7	USED WITHINS	
44.20.17	OIL SEAL - INPUT SHAFT - RENEW	3000 CC, TDV6, WITH PARTICULATE FILTER, WITHOUT DIESEL EXHAUST FLUID	6.3	USED WITHINS	

transmissionmanuals.com

SPECIAL TOOL(S)



100-012

Slide Hammer



100-012-01

Slide Hammer Adapter



307-613

Holding Pins, Torque Converter

transmissionmanuals.com

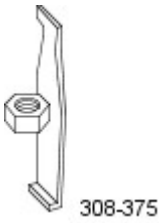

308-375

Remover, Input and Output Seal



JLR-308-845

Installer, Input Shaft Seal

transmissionmanuals.com

PART(S)

STEP	PART NAME	QUANTITY
Installation Step 1	Input shaft seal	1

REMOVAL

NOTE:

- This procedure contains some variation in the illustrations depending on the vehicle specification, but the essential information is always correct.
- This procedure contains illustrations showing certain components removed to provide extra clarity.

1. Raise and support the vehicle on a suitable 2 post lift.
   Refer to: Jacking and Lifting (100-02, Description and Operation).

2. Disconnect the startup battery ground cable.
   Refer to: Specifications (414-00, Specifications).

3. Remove the transmission.
   Refer to: Transmission - TDV6 3.0L Diesel (307-01, Removal).
   Refer to: Transmission - INGENIUM I4 2.0L Diesel (307-01, Removal).
   Refer to: Transmission - INGENIUM I4 2.0L Petrol (307-01, Removal).

transmissionmanuals.com

4.

CAUTION:

Be prepared to collect escaping fluids.

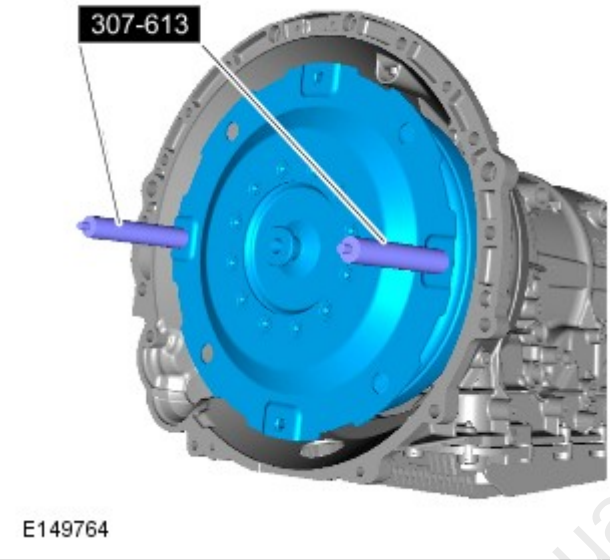

Using the special tool remove the torque convertor.
Special Tool(s): 307-613

5.

CAUTION:

Care must be taken to avoid damage to the seal register and running surface.

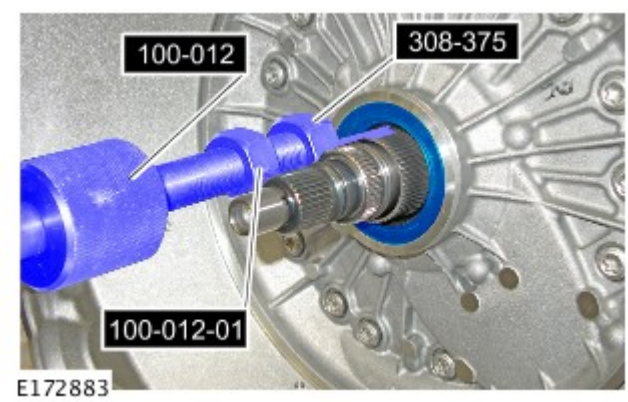

Using the special tools remove and discard the input shaft oil seal.
Special Tool(s): 100-012 , 100-012-01 , 308-375

transmissionmanuals.com

INSTALLATION

1.

CAUTION:

Care must be taken to avoid damage to the seal register and running surface.



Using the special tool install a new input shaft oil seal.
Special Tool(s): JLR-308-845
Renew Part: *Input shaft seal* *Quantity:* *1* .

transmissionmanuals.com

2.

CAUTION:

Make sure the torque converter is fully located into the oil pump drive.

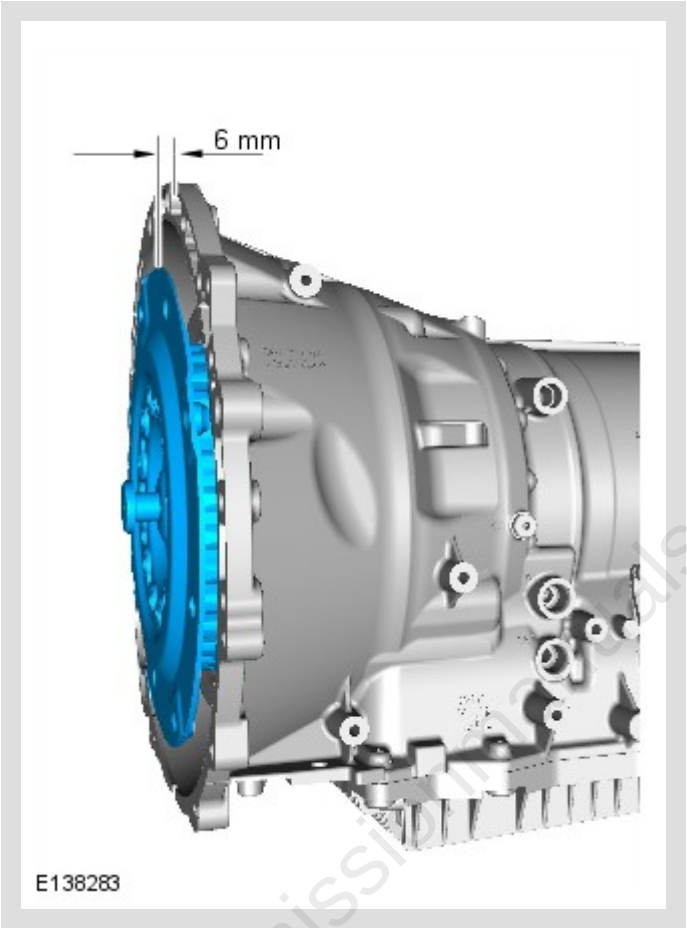

Make sure the torque converter is correctly located prior to installation.

3. Install the transmission.
Refer to: Transmission - TDV6 3.0L Diesel (307-01, Installation).
Refer to: Transmission - INGENIUM I4 2.0L Diesel (307-01, Installation).
Refer to: Transmission - INGENIUM I4 2.0L Petrol (307-01, Installation).

4. Connect the startup battery ground cable.
Refer to: Specifications (414-00, Specifications).

transmissionmanuals.com